For product information, contact:
+39 0444.866520 - info@boscaroitalia.it

DATA SHEET - CANTILEVER CRANE MAN BASKET



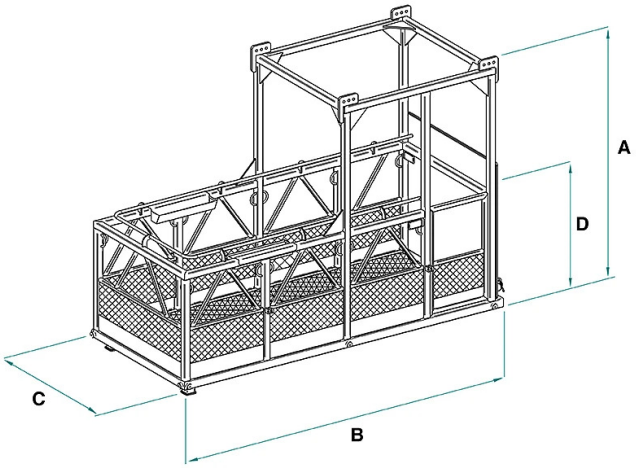

Code	Capacity (kg)	Weight (kg)	No. of people	Dimensions (mm)			
				A	B	C	D
CPP-2P.1400×3200	300	955	2	2430	3200	1400	1300
CPP-3P.1200×4600	450	1740	3	2430	4600	1200	1300

DATA SHEET - CANTILEVER CRANE MAN BASKET

Crane man baskets

Cantilever crane man basket

Cantilever man-lifting basket

Cantilever baskets represent the ideal solution for lifting people or materials at height, ensuring safety and versatility in construction and maintenance operations.
Designed to extend beyond the crane arm, these baskets provide access to hard-to-reach areas without the need for additional supports, significantly improving operational efficiency.
Main Features:
• Robust Structure: Made of high-strength steel, these baskets are designed to withstand even the toughest working conditions, ensuring maximum safety and durability over time.
• High Load Capacity: Available in various sizes and configurations, cantilever baskets can transport multiple operators and heavy equipment, meeting the needs of sectors such as construction, industry, and maritime.
• Cantilever Design: Thanks to their cantilever structure, these baskets allow work in areas that are hard to access directly beneath the crane, enhancing operational flexibility and effectiveness.
• Advanced Safety Systems: Each basket is equipped with handrails, safety harness anchor points, and self-closing inward doors, reducing the risk of accidental falls and ensuring maximum protection for operators.
• Non-Slip Flooring: The anti-slip surfaces provide greater operator safety, even in adverse weather conditions such as rain or frost.
• Quick Coupling: Designed to be easily connected to the crane via four-leg chains, these baskets enable quick and safe lifting and positioning operations.
Ideal Applications:
Cantilever baskets are used in a wide range of activities that require precision and safety at height, such as:

- Building façade works
- Infrastructure installations
- Maintenance of suspended structures

Operational Advantages:
Thanks to their specific design, cantilever baskets are an indispensable solution for ensuring safe and efficient lifting operations.
Their structure reduces downtime, optimizes productivity, and allows easy access to hard-to-reach areas while guaranteeing maximum safety for operators.
The crane baskets are designed to meet all the requirements deriving from the "essential safety requirements."
In compliance with the UNI EN 14502 standard (lifting equipment - equipment for lifting people) and Legislative Decree 09/04/2008 no. 81, Annex VI, point 3.1.4, it will be the responsibility of the safety officer to assess its suitability for the specific use.
The structure, made of steel and painted with a powder-coated finish, is equipped with emergency response stickers.

Application sectors

DATA SHEET - CANTILEVER CRANE MAN BASKET

Lifting