DATA SHEET - BLOCK GRABS



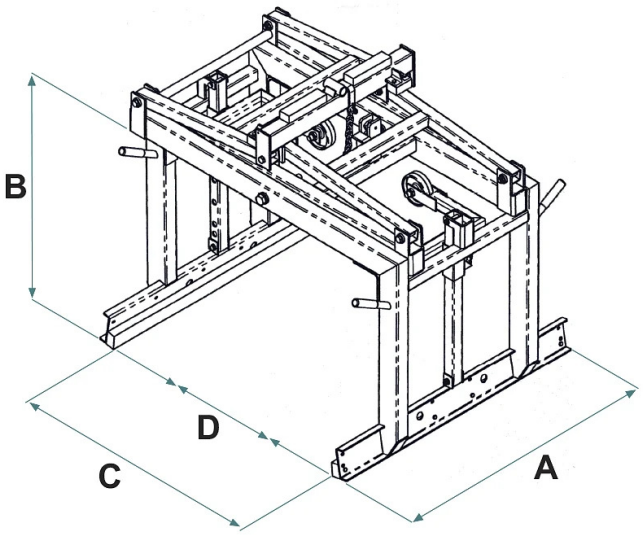

Code	Capacity (kg)	Weight (kg)	Dimensions (mm)			
			A	B	C	D
PZL	1100	155	1000	450	1000	900
PZL-M	1100	200	1000	900	1000	900
PZL-D	1800	225	1200	850	1100	500
PZL-D100	1800	245	1200	1000	1250	600
PZL-F	1100	175	1200	450	1250	1100

DATA SHEET - BLOCK GRABS

Lifting clamps

Block grabs

Assortment of block grabs

Universal mechanical clamp, ideal for construction sites dedicated to civil engineering projects and pavement works. Designed to handle packages of various sizes, this solution allows easy and safe transport of palletized construction materials, including interlocking paving blocks with vertical restraining straps for each row, slabs, curbstones, blocks, and more. Durable and replaceable rubber pads are used as gripping elements. Upon request, rubber pads with serrated inserts can be mounted for improved grip, and the use of a safety net for movements at a certain height is recommended. The fully automatic acquisition and release system represents an innovative solution designed to simplify and optimize lifting operations. Thanks to this advanced technology, the equipment is capable of grasping the load and subsequently releasing it without the need for manual intervention. This not only increases operational efficiency and speed but also enhances workplace safety by minimizing direct operator involvement in lifting and moving loads. Its versatility and robustness make it an effective tool for tackling a variety of applications on site, ensuring efficient and safe operation. All our clamps are built and tested in accordance with UNI EN 13155, UNI EN ISO 12100, UNI EN 13854, ISO 8686, UNI EN 10204 standards, and are supplied with a metal ID plate, certificate of conformity, and a user manual. Additionally, all our products are covered by a one-year warranty in compliance with the European Directive.

Application sectors

Construction Lifting