DATA SHEET - DROP BOTTOM OPENING SKIPS 2 DOOR



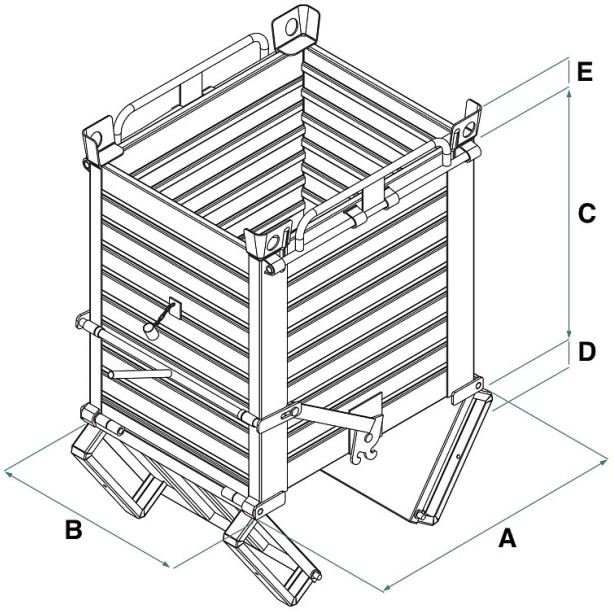

Code	Capacity (kg)	Capacity (L)	Weight (kg)	Dimensions (mm)				
				A	B	C	D	E
CL-FA50	2000	500	125	1000	800	650	150	110
CL-FA80	2000	800	145	1000	800	1000	150	110
CL-FA99	2000	1000	160	1000	800	1250	150	110
CL-FA100	2000	1000	210	1500	1000	650	150	110
CL-FA150	2000	1500	250	1500	1000	1000	150	110
CL-FA200	2000	2000	350	2000	1000	1000	150	110

DATA SHEET - DROP BOTTOM OPENING SKIPS 2 DOOR

Storage and handling equipment

Drop bottom opening skips 2 door

Sheet metal container with double hinged bottom and central lever

The sheet metal container with double hinged bottom represents a versatile and reliable solution for the collection and disposal of waste and scrap. Its meticulous construction makes it the ideal product for professional use in a wide range of industrial sectors. Handling is carried out using a forklift or a four-arm chain. A central lever allows the operator to open the bottom directly from the forklift, which can activate the tipping mechanism via a rope. This feature not only simplifies the emptying process but, above all, reduces the risk of injury. For greater safety, the openable-bottom container is equipped with a chain that allows it to be securely fastened to the forklift, preventing any possibility of slipping or accidental falling. This product is built and tested according to UNI EN ISO 12100, UNI EN 10027-1, and UNI EN 10204 standards and is issued with the appropriate metal ID plate and certificate of conformity. All our products are covered by a one-year warranty (European Directive).

Application sectors

Industry