Construction equipment

Technical Data Sheet

SAFETY EQUIPMENT

Material handling bin

CST-D

Heavy duty goods carrying cage, fitted with forklift pockets and lifting eyes.

Also available in galvanized version.

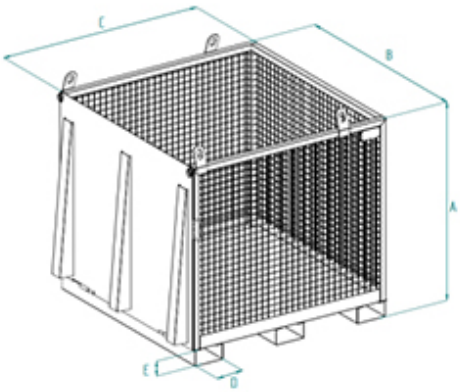

MODEL	CAP. (Kg)	DIMENSIONS (mm)					WEIGHT (kg)
		A	B	C	D	E	
CST-D	2000	1154	1346	1360	180	65	185
CST-DZN*	2000	1154	1346	1360	180	65	200
CST-D25.20.10	1000	1000	2000	2500	180	65	555

ZN* = galvanized model

Boscaro srl
Via G. Cederle, 1 - 36020
Campiglia dei Berici (Vicenza) Italy

Tel +39 0444 866520
Fax +39 0444 866350
P.IVA: 00672450244